MSP Connections

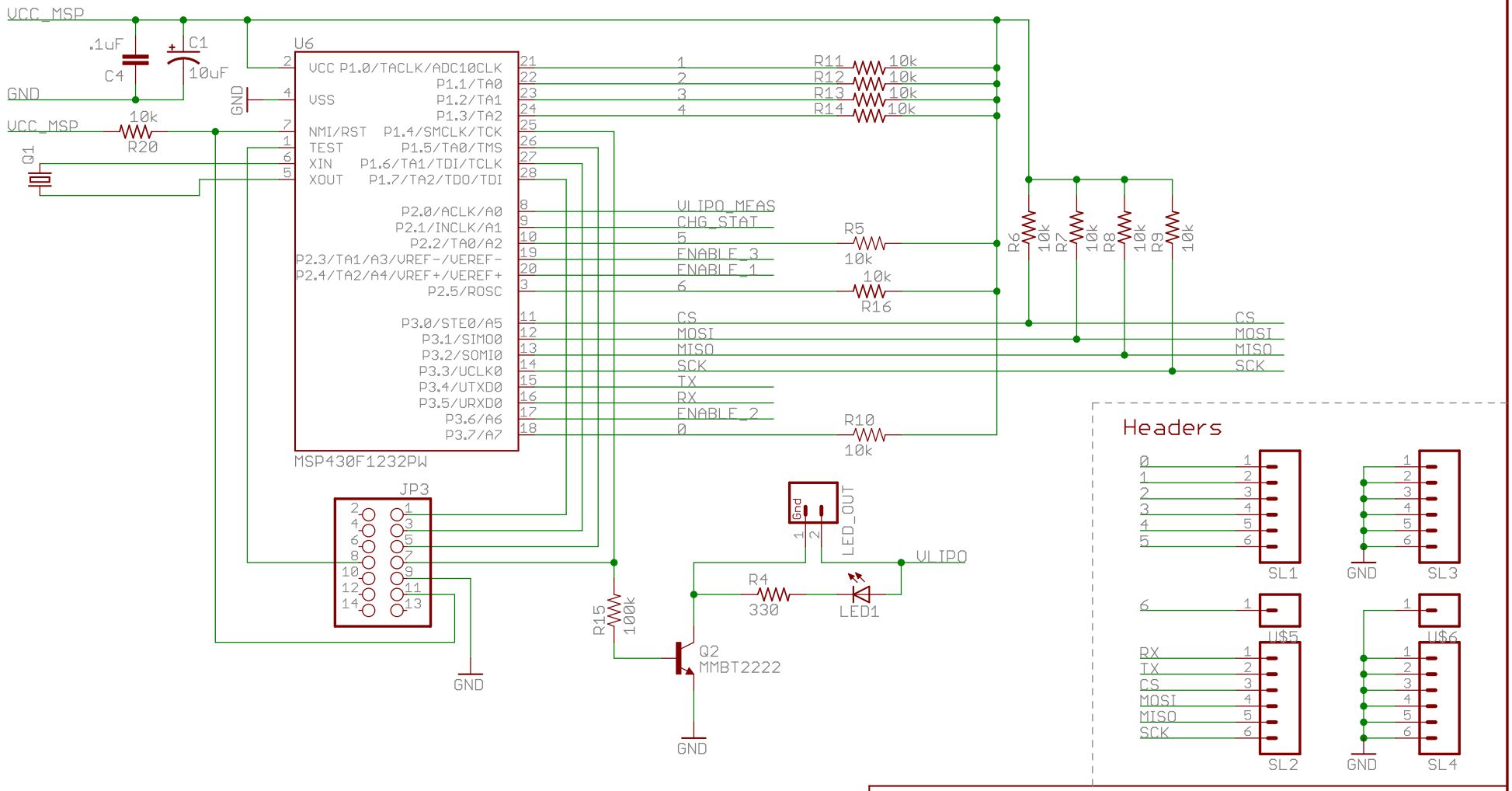

TITLE: SFE Lipower Controller	SFE
Document Number:	REV:
Date: 8/6/2008 6:43:17 PM	Sheet: 1/2