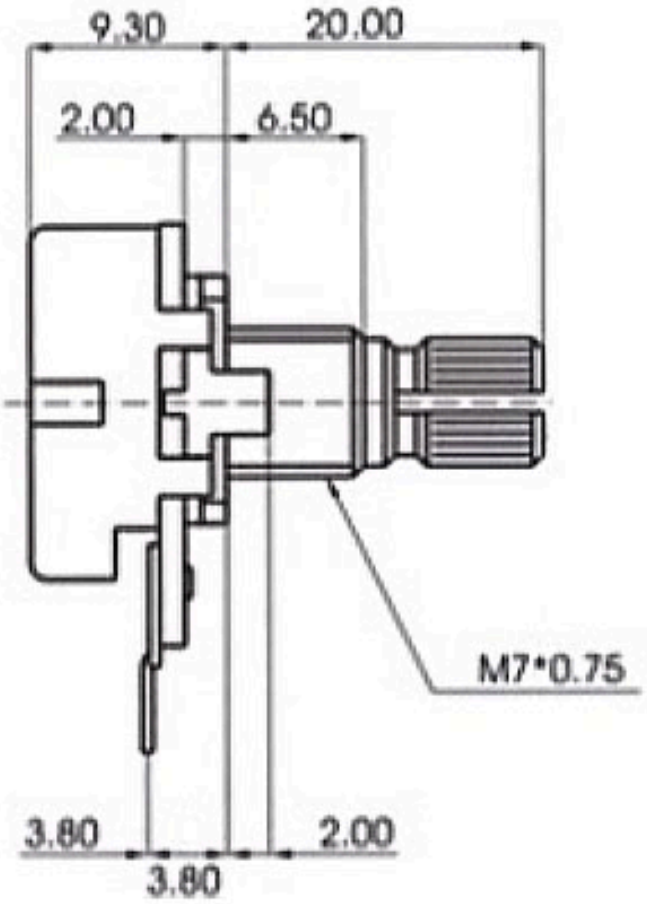
9.30
20.00
2.00
6.50
M7*0.75
3.80
3.80
2.00

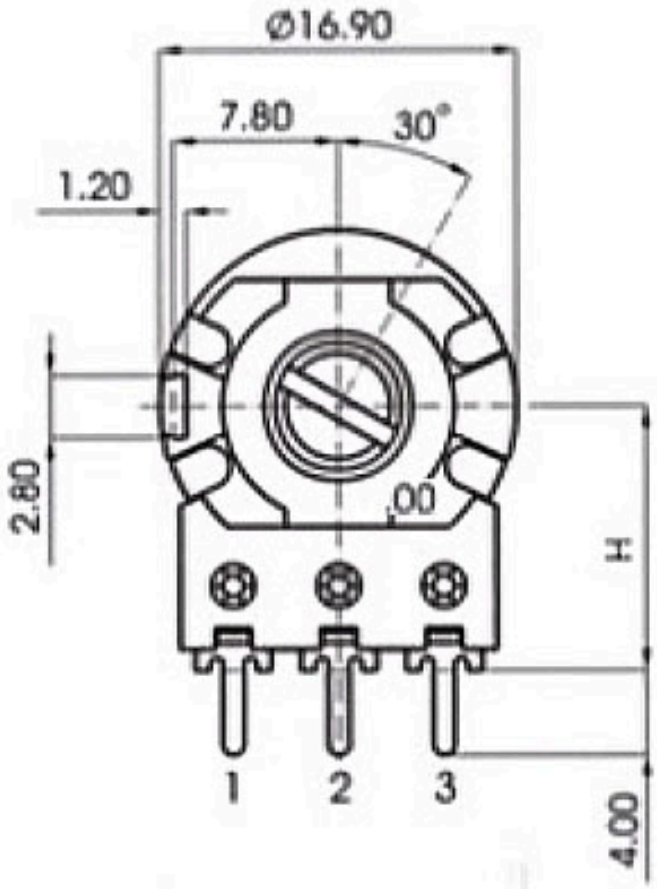
Ø16.90
7.80
30°
1.20
2.80
H
1
2
3
4.00

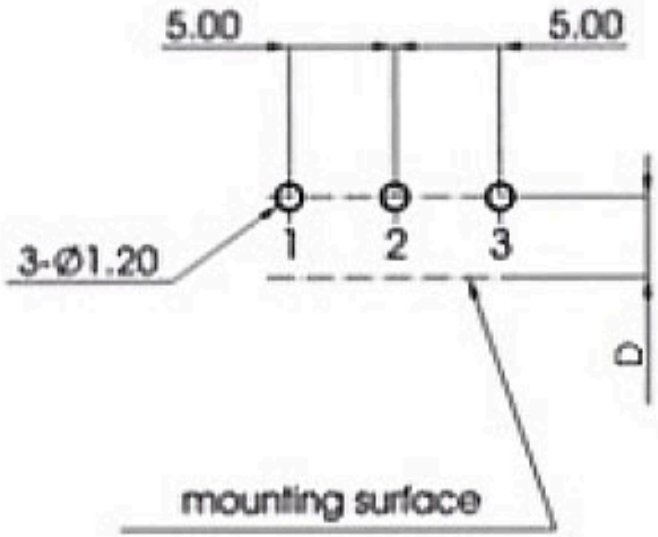
5.00
5.00
3-Ø1.20
1
2
3
D
mounting surface