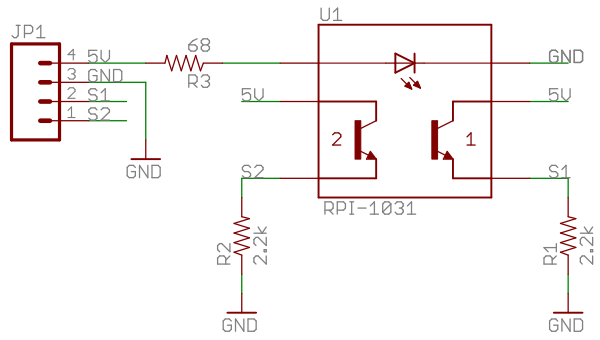

open hardware

SFE

TITLE: Tilt-A-Whirl_RPI-1031_BOB-v11

Document Number:

REV:

Date: 7/29/2011 11:32:24 AM

Sheet: 1/1

Released under the Creative Commons Attribution Share-Alike 3.0 License
http://creativecommons.org/licenses/by-sa/3.0
Design by:Hilary Hoops